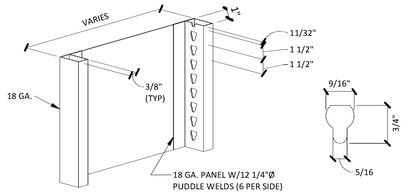

END UPRIGHT | 01A

N.T.S. | SR2.1

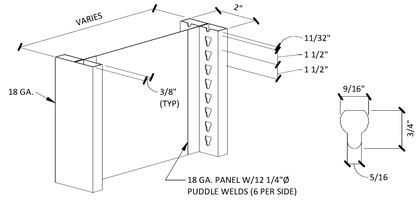

INTERMEDIATE UPRIGHT | 01B

N.T.S. | SR2.1

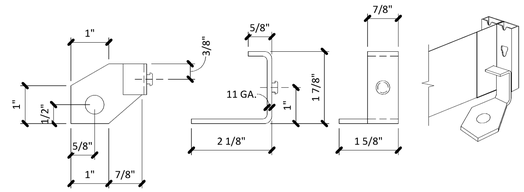

FOOT PLATE | 02

N.T.S. | SR2.1

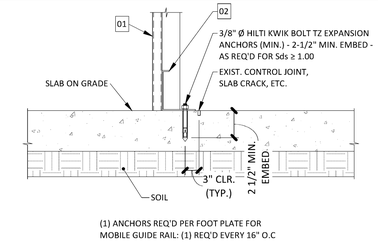

ANCHOR | 03

N.T.S. | SR2.1

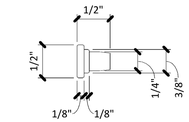

RIVET | 04

N.T.S. | SR2.1

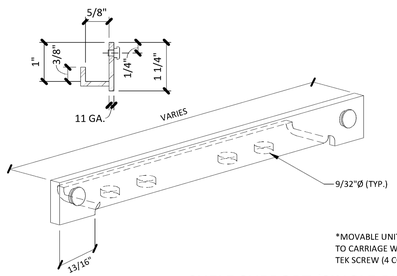

*MOVABLE UNITS ATTACH
TO CARRIAGE W/ 1/4"-14
TEK SCREW (4 CORNERS)

SHELF SUPPORT (SINGLE RIVET) | 05A

N.T.S. | SR2.1

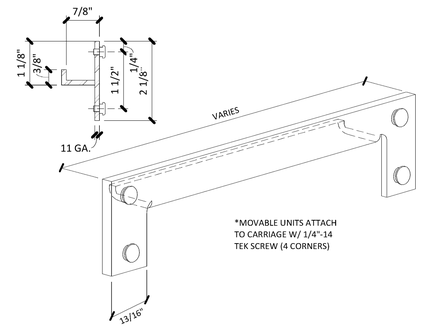

*MOVABLE UNITS ATTACH
TO CARRIAGE W/ 1/4"-14
TEK SCREW (4 CORNERS)

SHELF SUPPORT (DOUBLE RIVET) | 05B

N.T.S. | SR2.1

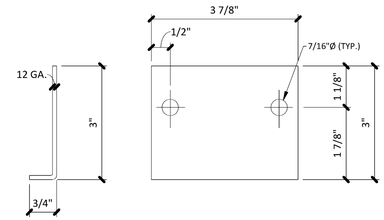

ANTI-TIP HOOK | 06

N.T.S. | SR2.1

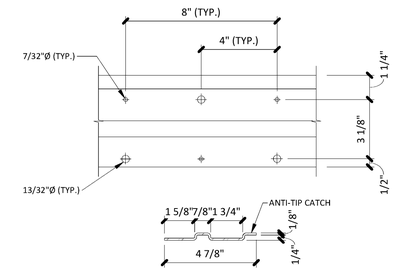

GUIDE RAIL | 07

N.T.S. | SR2.1

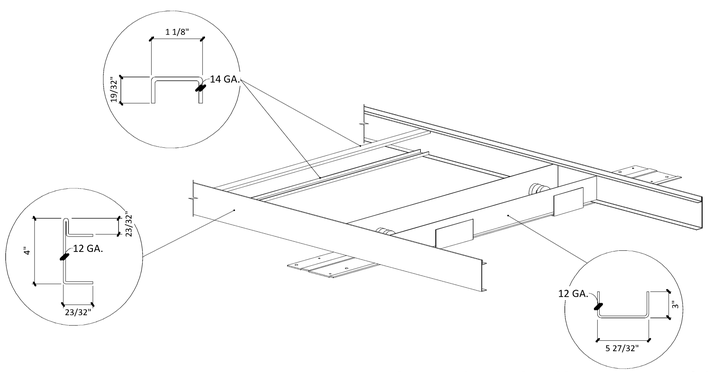

MOVABLE CARRIAGE ASSEMBLY DETAIL | 08

N.T.S. | SR2.1

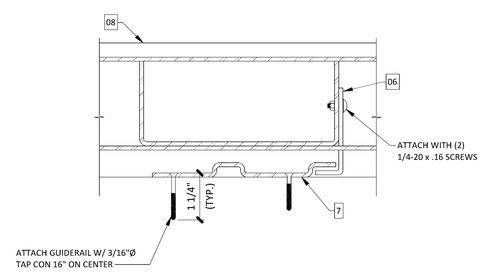

VIEW "A-A" @ GUIDE RAIL | 09

N.T.S. | SR2.1

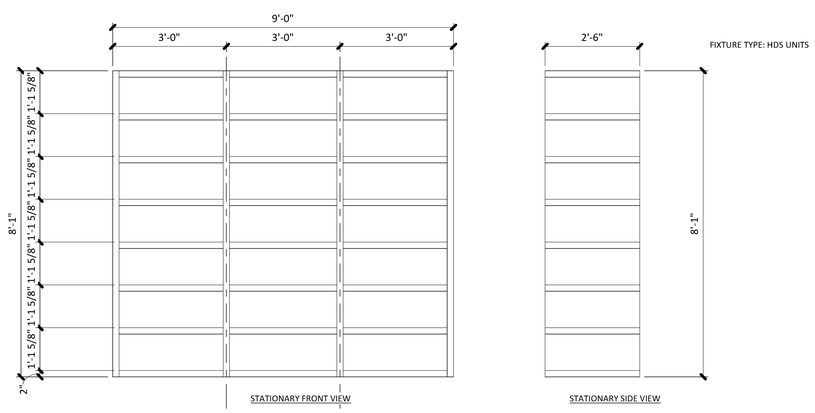

SHELVING ELEVATIONS | 10

N.T.S. | SR2.1

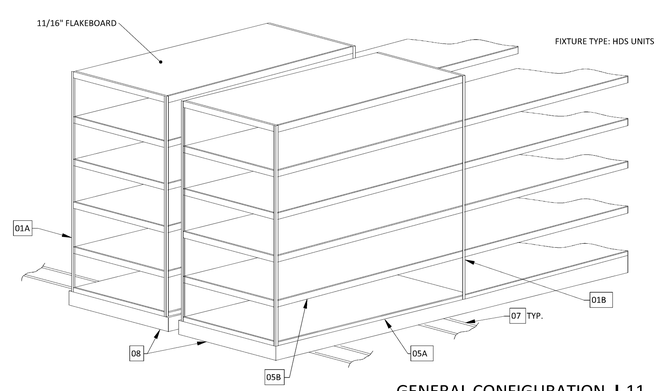

GENERAL CONFIGURATION | 11

3/8" = 1'-0" | SR2.1

NEW STORE

ATHLETA

GAP INC.
STORE DEVELOPMENT
2 FOLSOM STREET
SAN FRANCISCO, CA 94105

ORACLE I.D.: 140261

STORE NUMBER: 7341

STORE LOCATION:
STATION PARK
230 NE PROMONTORY
SPACE C-120
FARMINGTON, UT 84025

DESIGN TYPE:	DERBY B
GENERATION:	21Q34
PROTOTYPE DATE:	1/8/2021
OPENING:	2021

ARCHITECT INFO:

brr

ARCHITECT OF RECORD:

MARIAH MEYER
8131 METCALF AVE
SUITE 300
OVERLAND PARK, KS 66204

www.brrarch.com

TEL: 913-262-9095
FAX:913-262-9044

CONSULTANT INFO:

BSE STRUCTURAL ENGINEERS

BSE Structural Engineers LLC
11320 West 79th Street
Lenexa, Kansas 66214
Phone 913.492.7400
www.BSEstructural.com
Project No: 21-060

PROFESSIONAL STAMP:

ISSUE TYPE:

LL/PERMIT/BID:	02/19/21

REVISIONS:

REVISION #1: 1	XX/XX/XX

DRAWN BY:	JCO
A/E JOB NUMBER:	65011072

TITLE SHEET:

TYPICAL RACK
FRAMING DETAILS

SHEET NUMBER:

SR2.1